Electrolux PROFESSIONAL

Salamanders
Electric Salamander, front open, adjustable grid, 760mm

ITEM #

MODEL #

NAME #

SIS #

AIA #



283017 (E0UUBEBOMOA)	Electric Salamander, front open, adjustable grid, 760 mm, accepts GN 1/1
283016 (E0UUBDBOMOA)	Electric Salamander, front open, adjustable grid, 760 mm, accepts GN 1/1

Short Form Specification

Item No.

Constructed in AISI 430 stainless steel. Table top model can be hanged on the wall with wall special brackets (optional). Front open. Removable back and side panels in order to use the appliance as a pass-through (open on 3 sides). 2 heating areas independently controlled by energy regulator. Cooking grid adjustable on 6 positions by means of a rack system. Removable stainless steel drip tray and chromium-plated grid fitted with heat resistant handles.

Main Features

- 2 independent cooking zones managed by 2 knobs.
- Unit to be heated via incoloy armoured heating elements.
- Cooking plate size: 575x400 mm accept GN 1/1.
- Heat control with energy regulator.
- Front open, side and back panels can be removed.
- Height of the grid can be adjusted on 6 different levels through the rack system.

Construction

- Entirely constructed in 430 AISI stainless steel.
- Removable stainless steel drip tray.
- Chromium-plated steel grid with a safety stop to avoid accidental fall.
- Table top unit can be wall mounted with dedicated optional accessory.
- 4 rubber feet.

Optional Accessories

- Wall mounted brackets kit for salamanders open on 1 side — PNC 283036 ❑

APPROVAL:

Salamanders
Electric Salamander, front open, adjustable grid, 760mm

Front

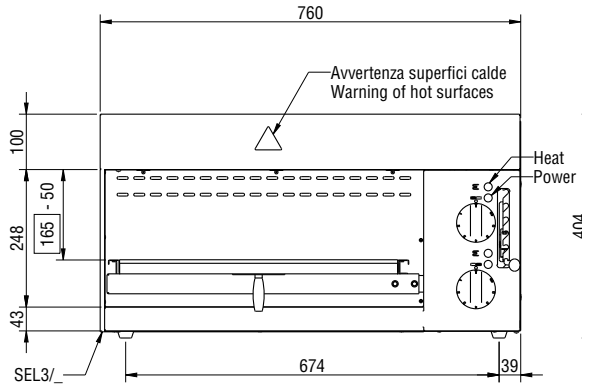

Side

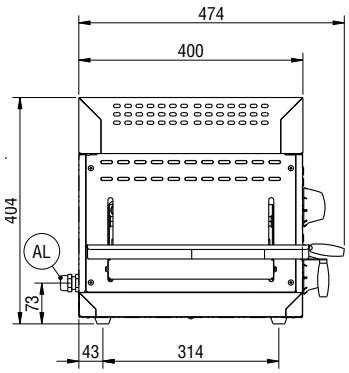

EI = Electrical inlet (power)

Rear side

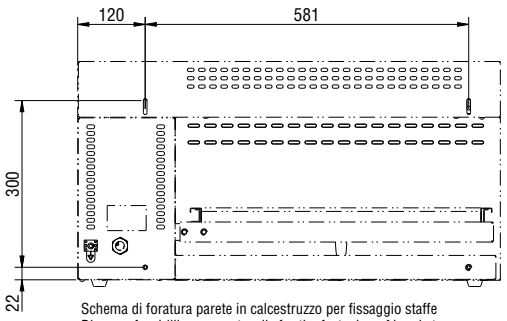

Schema di foratura parete in calcestruzzo per fissaggio staffe
Diagram for drilling cement walls for the fastening of brackets
Schema für Betonwandbohrungen zur Befestigung der Wandhalterungen
Schéma de perçage de la paroi en béton pour fixer les étriers
Esquema de perforacion de la pared de hormigón para fijación soportes

Electric

Supply voltage:	
283017 (E0UUBEBOMOA)	220-240 V/1 ph/50/60 Hz
283016 (E0UUBDBOMOA)	380/415 V/3N ph/50/60 Hz
Electrical power max.:	4 kW

Key Information:

External dimensions, Width:	759 mm
External dimensions, Depth:	484 mm
External dimensions, Height:	404 mm
Net weight:	32 kg
N° of grid levels:	6

The company reserves the right to make modifications to the products without prior notice. All information correct at time of printing.

2026.11.20